Model year 1985 LH Connector pin 14 to MAF pin 6

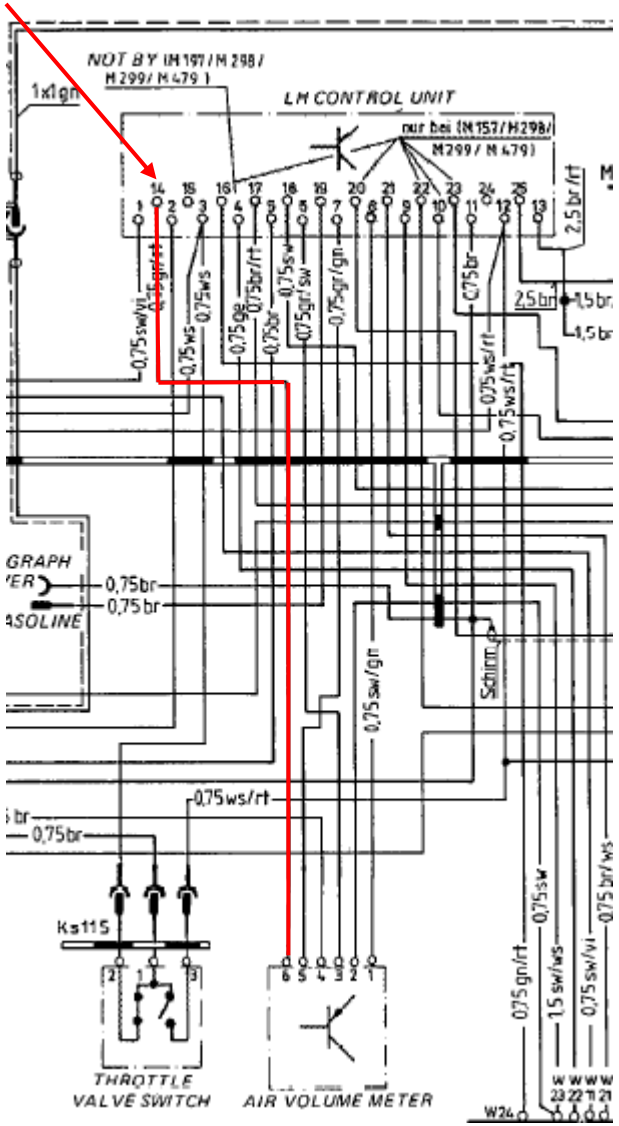

Model year 1985 schematic wiring diagram

Model year 1985 – 1986

US Model year 1985 – 1986: To check the CO-pot resistance, remove the MAF and check the resistance with an ohmmeter, between terminals 3 & 6-- see WSM pg. 24-113 for the pin numbering.

4. Measure resistance for idle mixture position.
Connect ohmmeter on terminals 6 and 3 of air flow sensor.

Specification: 0 . . . 1000 ohms.

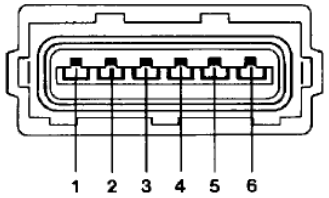

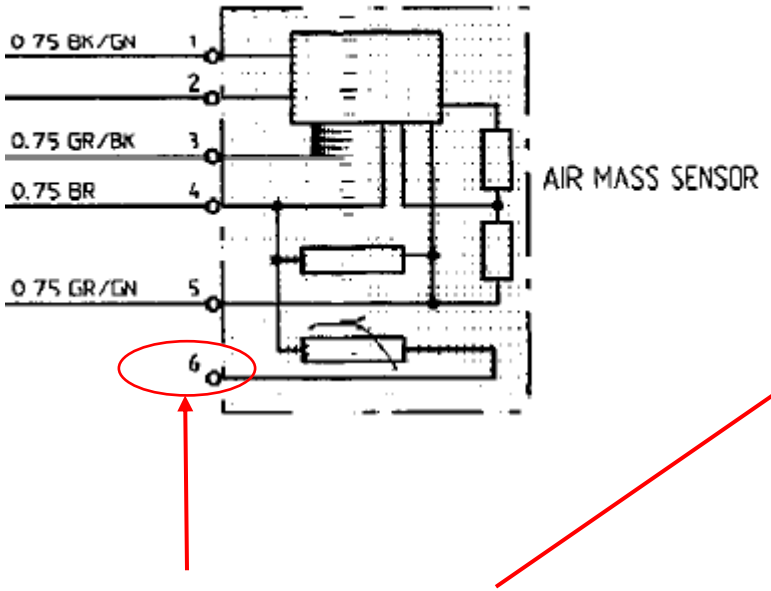

Note: Model year 1987 – 1995 this is a no-connect on the schematic wiring diagrams

Model year 1987 – 1995

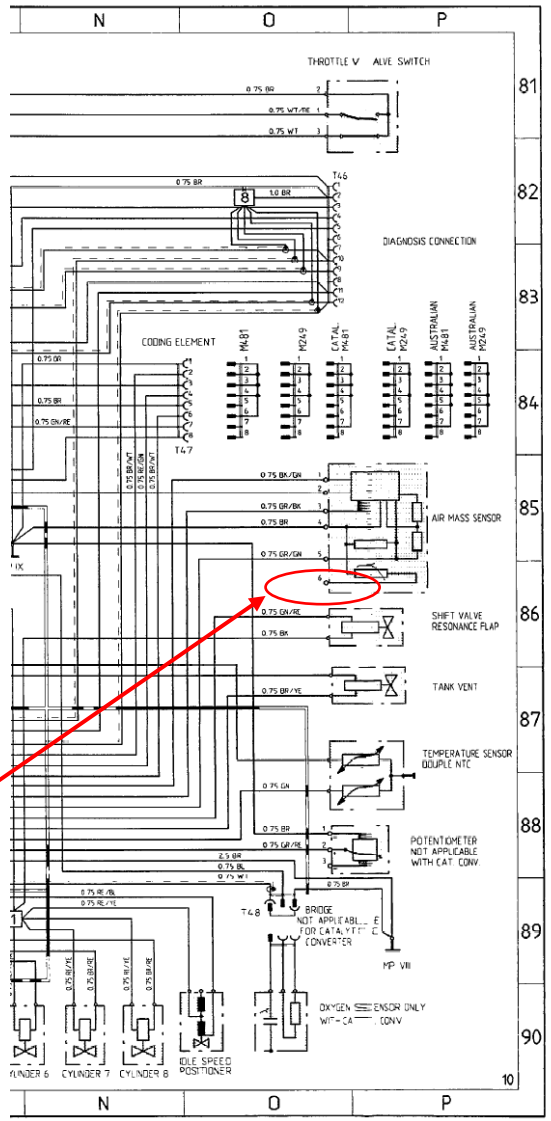

Model year 1988 schematic wiring diagram