Fuel Line Replacement on a Porsche 928

928s R Us

817.430.2688

Like many things, the fuel lines in the Porsche 928 engine bay can become dried out and brittle, and are prone to leakage. Since these lines carry fuel (some under high pressure) through the hot engine bay, it is possible that a fuel leak could lead to an engine fire. Once begun, and engine bay fire quickly gets out of control and in only minutes can turn your car into an inferno.

There are many documented cases of this, which have lead some to think that the 928 is prone to engine fires. The fact is that any car with fuel injection has a potential to catch fire if the fuel lines age and begin to crack. The solution to this is a simple one: Replace the rubber parts of your fuel delivery system with new ones. The fuel line kit provided by Roger at 928s R Us contains everything you need to replace these old lines and ensure years of driving without the worry of dried out fuel lines leaking.

Replacing these lines seems intimidating to the novice because you know you'll be dealing with fuel lines which require great care, as well as because the old factory lines will need to be modified to accept the new hose and fittings. The job really isn't that difficult though. If you have access to:

- A rotary tool like a Dremel™ or a drill with a cutoff wheel
- A razor knife
- Some plyers
- Standard screwdriver

… you've got everything you need.

SAFETY FIRST: Always wear goggles in the shop. Also, you're going to be working with fuel lines. Some may have pressurized fuel in them and can spray. You'll want to be careful to protect yourself from fuel spray. Fuel and fuel vapors are flammable!!! Do not work on the fuel system while smoking or in the presence of an open flame or any source of a spark.

Step 1: bleed down the fuel pressure from the system. I do this by starting up the car wherever you choose to do the work, and then carefully removing the fuel pump relay while the car is running. When the car stalls, there should be much less fuel in the rails (although there will still be some).
Step 2: Disconnect the battery.

Once you've got the fuel line kit (what you don't have one? Roger at 928s R Us can be reached at sales@928sRus.com or call 817.430.2688) you are well on your way.

You'll have to identify which lines need to be replaced. Remove the air tubes on the sides of your engine as well as the airbox (where the filter is).

Step 3: Removing the Airbox

First undo the rubber straps, lift off the cover, then the filter.

Then you'll have to remove 2 10 mm bolts that hold the airbox down, one on each side (don't lose the washers).

Using a long standard screwdriver, loosen the hose clamp that holds the bottom of the airbox down into the top of the MAF.

Under the driver's side (us) there's a temp sensor connected to it from underneath, you'll have to open the metal spring clip and unplug this to get the airbox out.

Now you've got access to all of the lines you'll need. The WSM diagram below shows *some* of the lines that will need to be replaced (thanks Big Dave)

#6, 7, 8, and 10 are going to need to be replaced. As well as the fuel cooler line that is at the rear of the engine and connects by #9. (For #8 at the bottom, the left side is the part you'll replace, reusing the hard line on the right side). This is from a MY 90. The 85-86 has a much shorter #10 line.

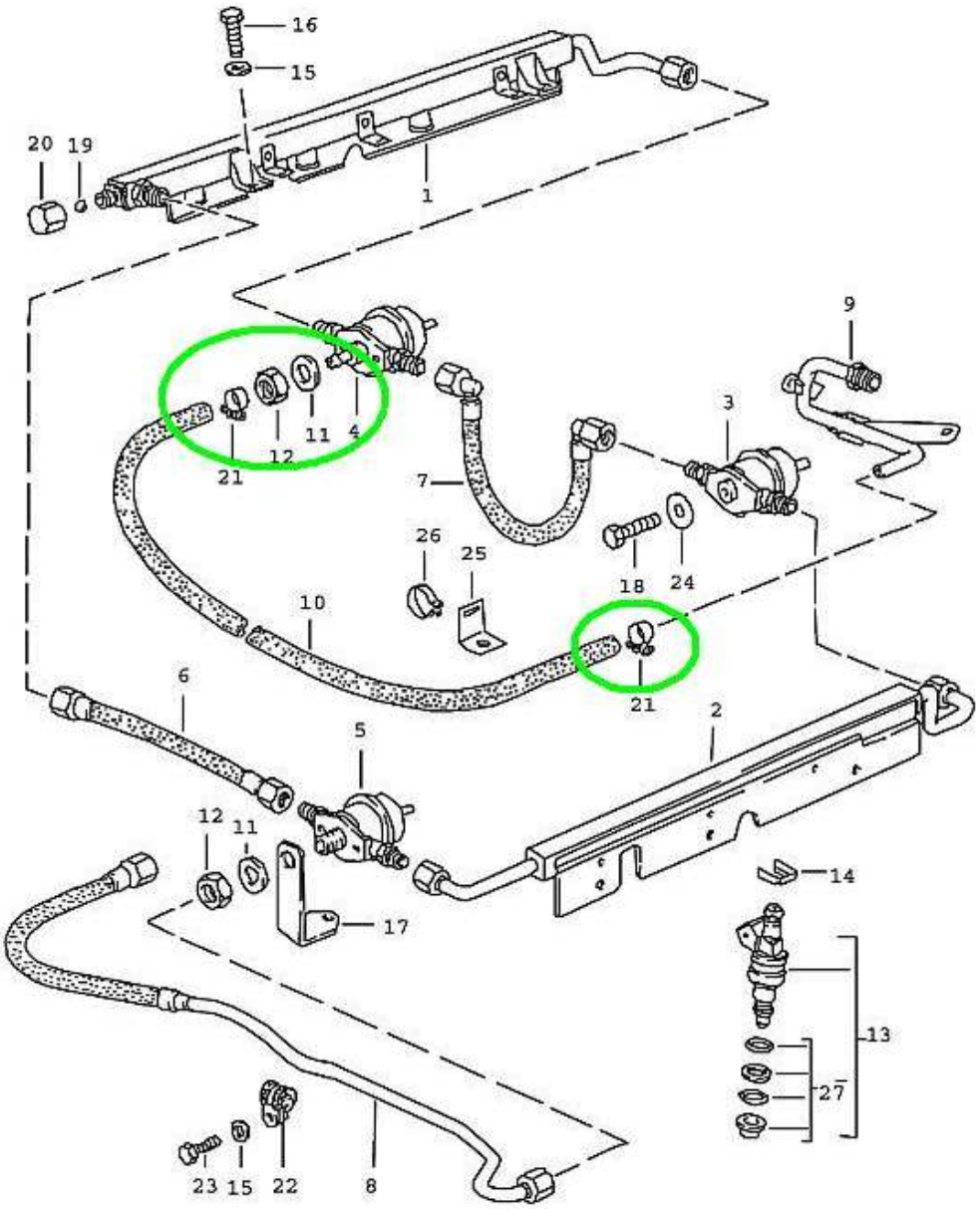

Fig. 1

NOTE: This is for a different MY. Regardless of your setup, you'll have to trace the lines that connect to the fuel injection rails, and replace all of the hoses that are in that line or that connect the fuel pressure regulators (3 and 4 in this diagram).
In this one, 6, 7, 8, 10, the rubber part of 10a (if present) as well as that fuel cooler line back by the firewall will have to be replaced.

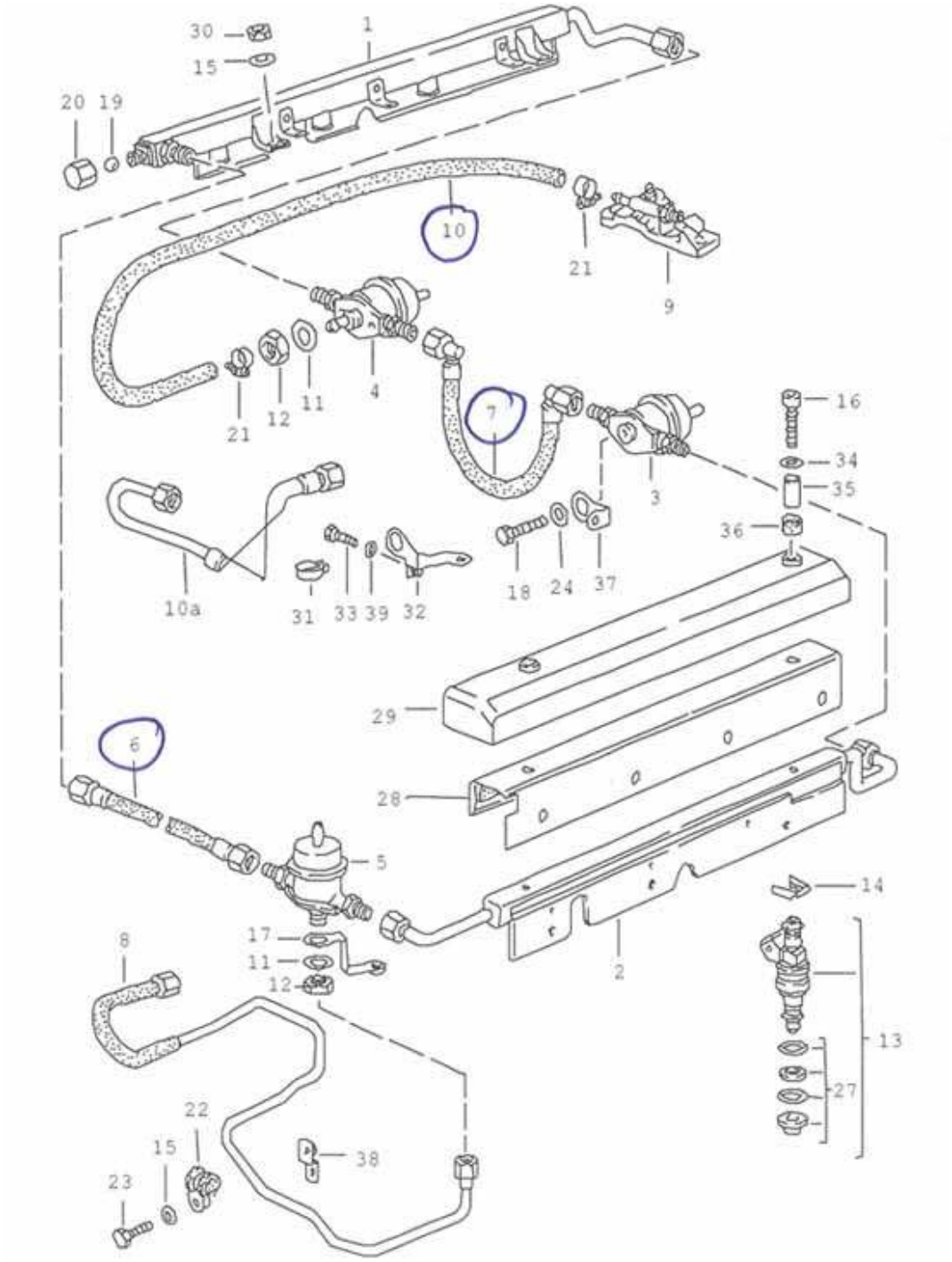

Removing the factory crimp or 'swage' fittings: This part can be intimidating until you do the first one. It may seem like the factory fitting is a permanent piece and if you do anything to it, you'll render it useless. The fact is it's just a barbed brass nipple (hose fitting) with a crimp connector on the end of the hose.

Several of the following photos are courtesy of Big Dave (thanks Dave)

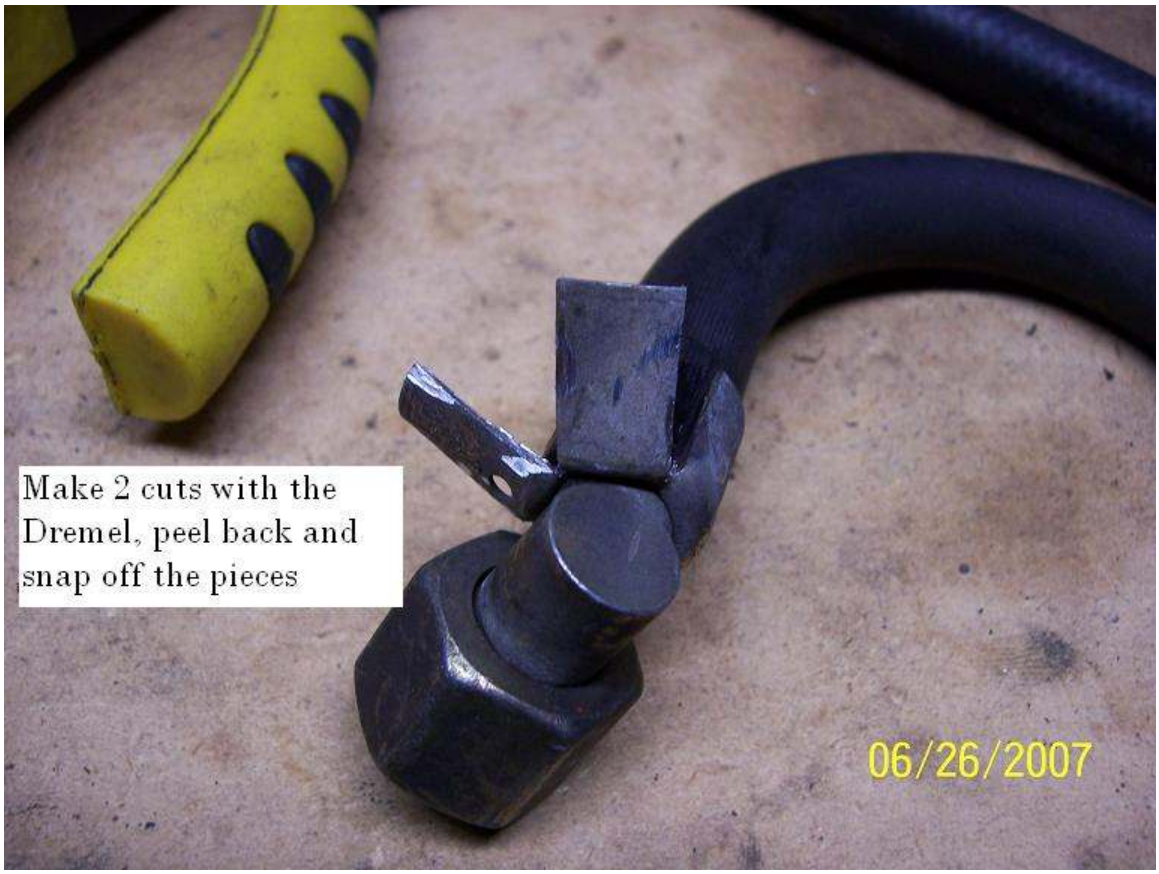

If you look closely you'll see that the collar and the nipple are not connected. The collar or 'swage fitting' is separate and if you make two longitudinal cuts on opposite sides of the fitting, you can pry it open like a clamshell and just pull it off, exposing the hose on the nipple.

Here you can see the collar off, and that the hose barb is a separate piece.

These are from MY 90. (Parts are 11,12 21 from page 4, fig. 1.)

This is a pic of the rear line coming off of the fuel cooler (MY 90?)

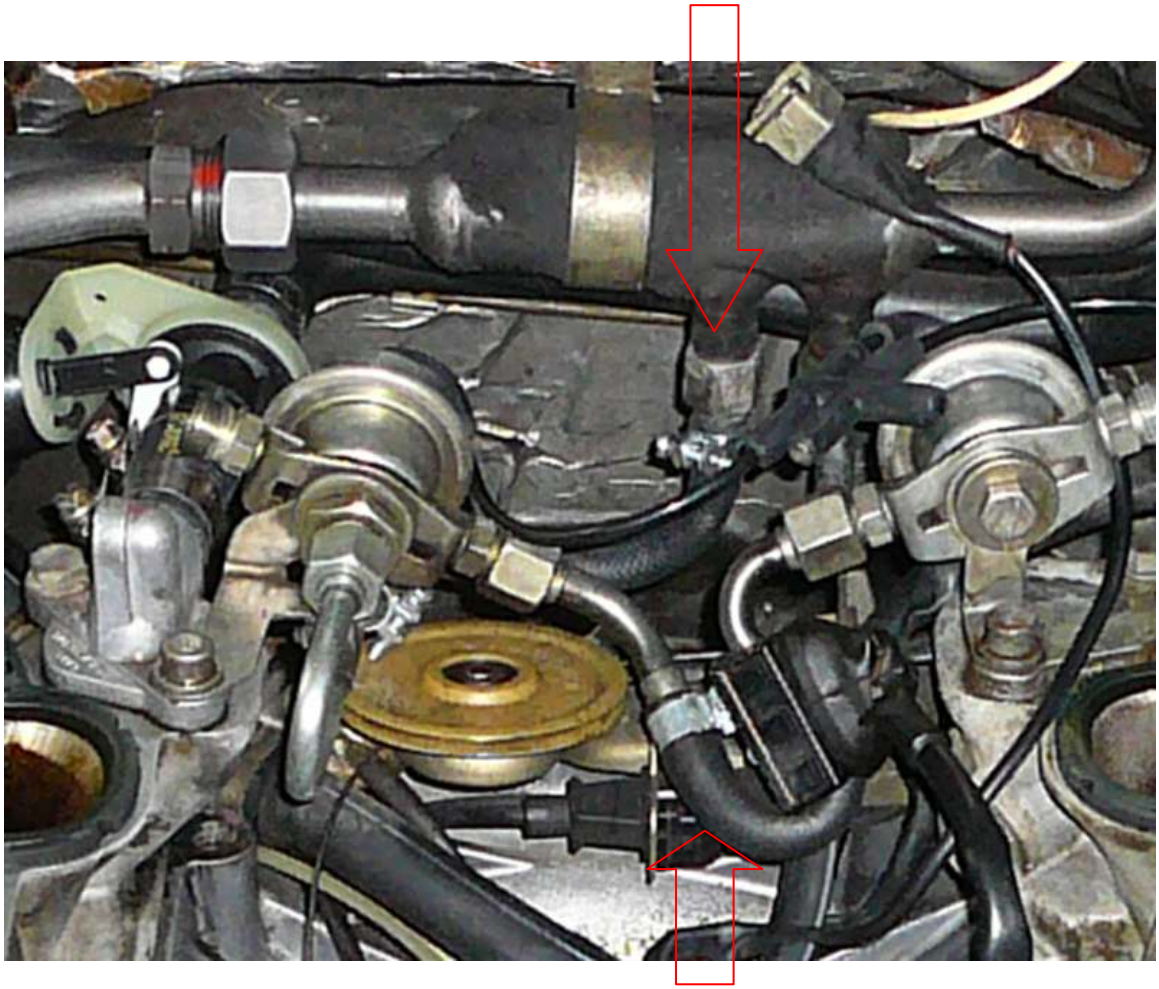

And a tight-bend replacement line here

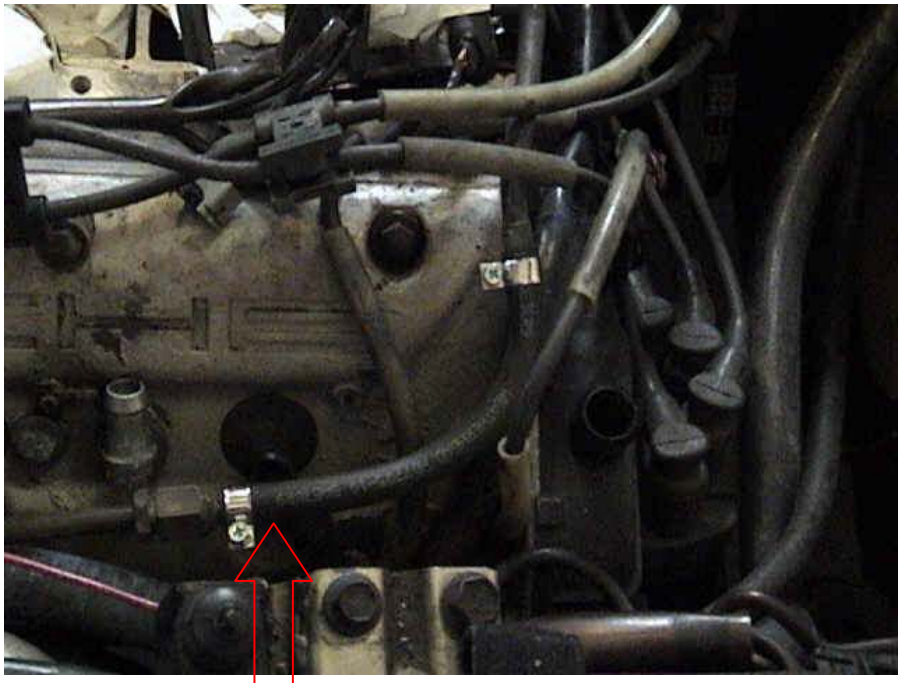

Front line replaced

All three rear lines shown in an ‘85-’86

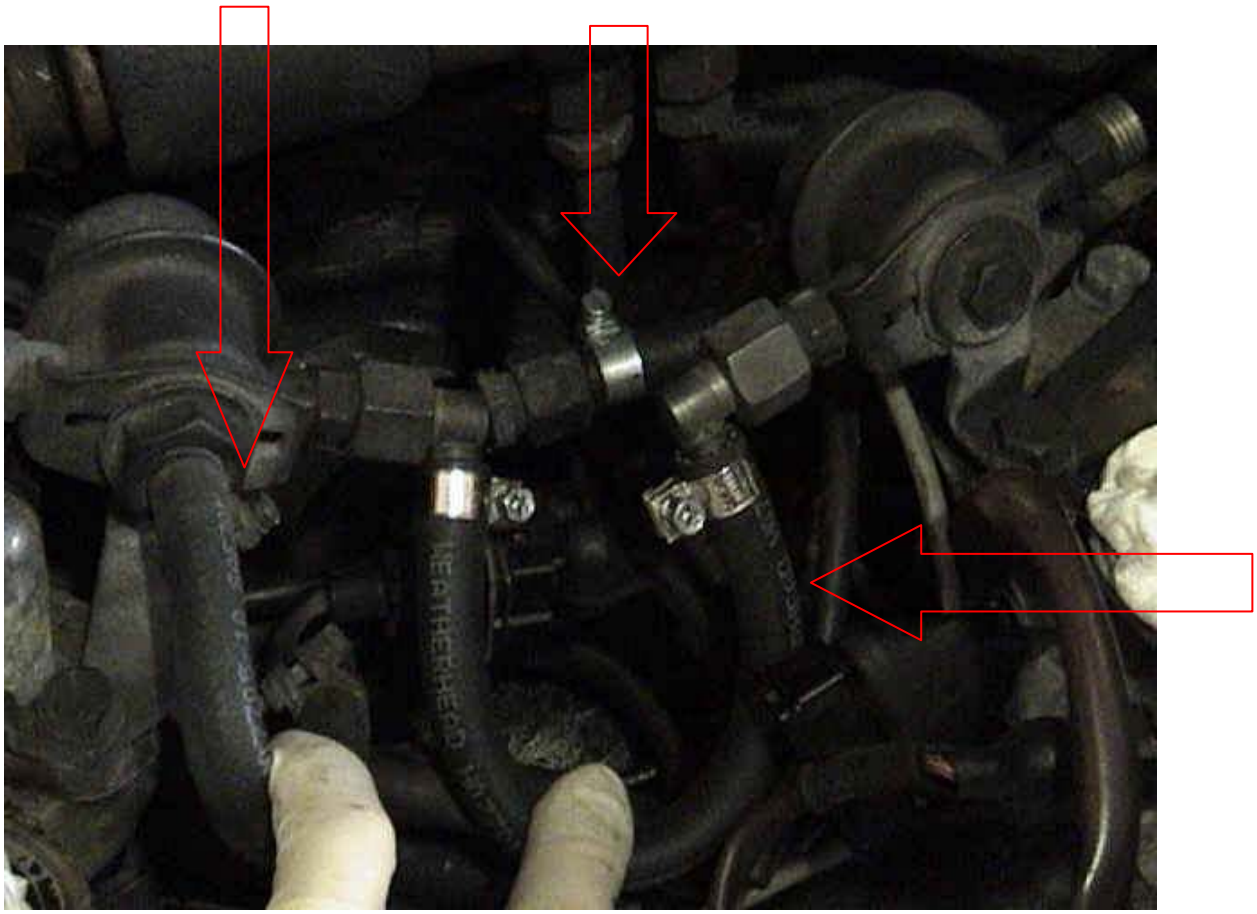

For reference (thanks Heinrich) a fuel flow diagram.

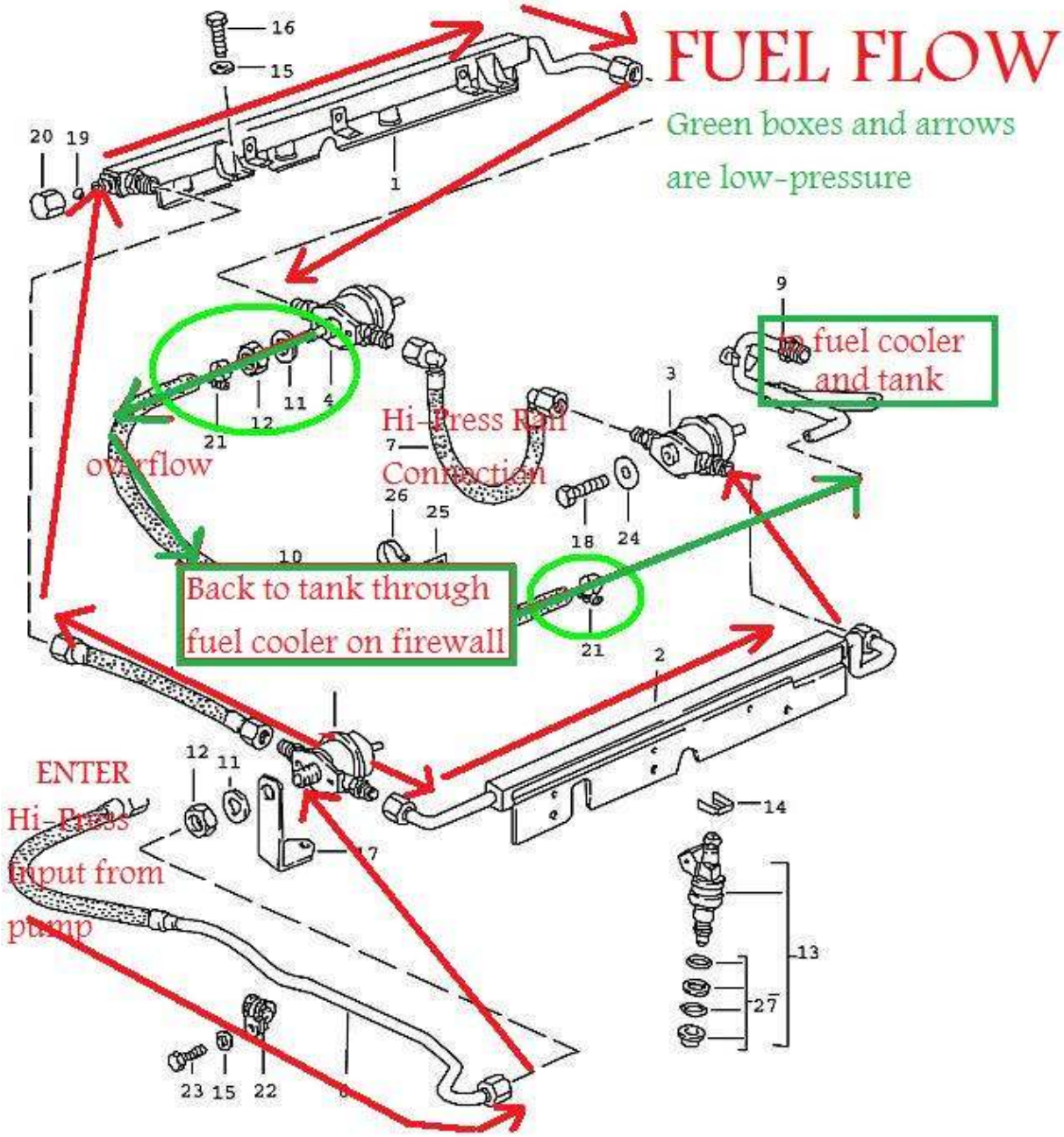

Finishing up:
Once all lines are tightened and double checked, replace the airbox (don't forget to plug in that temp sensor and tighten the hose clamp on the bottom of the airbox). Replace the filter, top of airbox, then airtubes.

Replace the fuel pump relay (Do you have a fire extinguisher in your shop?) then one more check to see if you smell fuel. If not, and you have no leaks, crank it over. You might want to shut it down as soon as it starts, and check for leaks now that the system is pressurized. Look at each connection and smell for gas. If not, you should be OK. Congratulations, you car should be safe from an engine bay fire for years to come!